TS2 - BATHTUB-SHOWER COMBO - TYPE A

AQUATIC
The bath people

Submittal Sheet

Aquatic products may be specified as Lasco Bathware.

2603SMTE

ADA Compliant

CUSTOMER: _____

JOB NAME: _____

PO #: _____

QUOTE #: _____ QUANTITY: _____

SHIP TO: _____

_____

_____ ____/____/____
PLUMBING CONTRACTOR APPROVAL DATE

_____ ____/____/____
GENERAL CONTRACTOR APPROVAL DATE

_____ ____/____/____
ENGINEER APPROVAL DATE

_____ ____/____/____
ARCHITECT APPROVAL DATE

STANDARD FEATURES

- Code compliant when fully equipped and installed according to guidelines
- Extra wide tub
- Integral toiletry shelves
- LH or RH drain location
- Slip resistant, textured bottom [ASTM F-462]

CONFIGURATION

~~☐ Fully equipped with seat — ADA~~
~~Includes four 24" x 1-1/2" diameter grab bars; tri-fold removable seat;~~
~~pressure balancing mixing valve and hand-held shower assembly per ADA guidelines~~

CUSTOM OPTIONS (not available if ADA configuration is selected)

Fixture Wall ☐ LH ☐ RH

Four horizontal 24" grab bars

☐ Stainless steel (1½" dia.) ☐ Powder-coated white (1¼" dia.)

☐ Tri-fold, plastic removable seat

~~☐ Teakwood finish fold up seat~~

~~☐ Hand-held shower assembly with 30" slide bar and 60" hose~~

~~☐ Pressure balancing mixing valve~~

OPTIONAL ACCESSORIES (available for all models)

~~☐ Soap dish~~

~~☐ Curtain rod (Not ADA compliant)~~

~~☐ Shower curtain~~

~~☐ Brass drain~~

Standard colors

☐ Almond ☐ Biscuit ☐ Bone ☐ White

☐ Other (contact customer service for custom color options

~~☐ Additional accessories~~

For pricing of units and additional options, reference the Aquatic Price Book.

Hand shower will be provided in separate submittal.

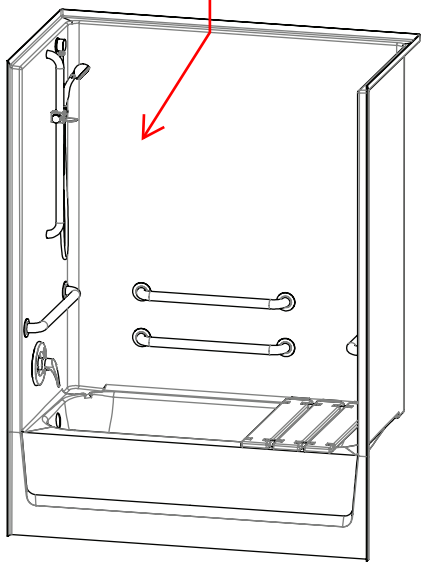

ICC ES PMG

Int. Dim.	56 W x 30 ¼ D x 78 H (1420 x 770 x 1980)
Ext. Dim.	60 W x 33 ¼ D x 79 ¼ H (1525 x 845 x 2015)
Skirt Ht.	17 (430) skirt
Packaged Wt.	209 lbs. (95 kg.) gross
Material	Gelcoat
Warranty	Gelcoat Finished Products — Five Years

inches (mm)

IMPORTANT: **ADA compliant showers with NO interior threshold will have water escape onto the bathroom floor. Aquatic highly recommends you take the following precautions:**

1. Install only the minimum number of ADA units without an interior threshold required for each job. If possible install Aquatic's accessible models that have a ½ (15) interior threshold to reduce the amount of water that escapes from the shower.
2. When installing units with NO interior threshold, install a FLOOR DRAIN to control the water that escapes onto the bathroom floor.
3. Depending on your application, you may choose to install Aquatic's vinyl flexible dam or removable threshold, which helps better retain water within the shower. However, these items may not necessarily meet ADA or other code requirements. Always confirm code compliance with your local building authority.

To complete your order, this document must be signed and faxed to the Aquatic Centralized Customer Service Center.
Fax (866) 544-5353 • Phone (800) 945-2726

TS2 - BATHTUB-SHOWER COMBO - TYPE A

AQUATIC

Submittal Sheet

Aquatic products may be specified as Lasco Bathware.

2603SMTE ADA/UFAS/TAS Compliant

Please indicate changes needed.

Hand shower will be provided in separate submittal. See memo attached for control elevations and showerhead rough-in locations.

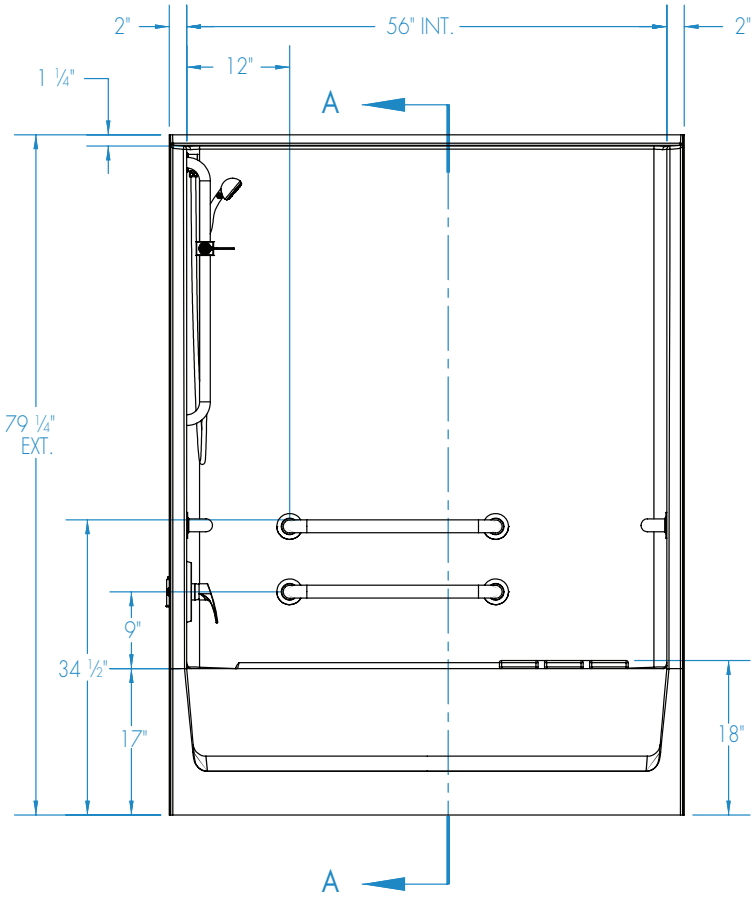

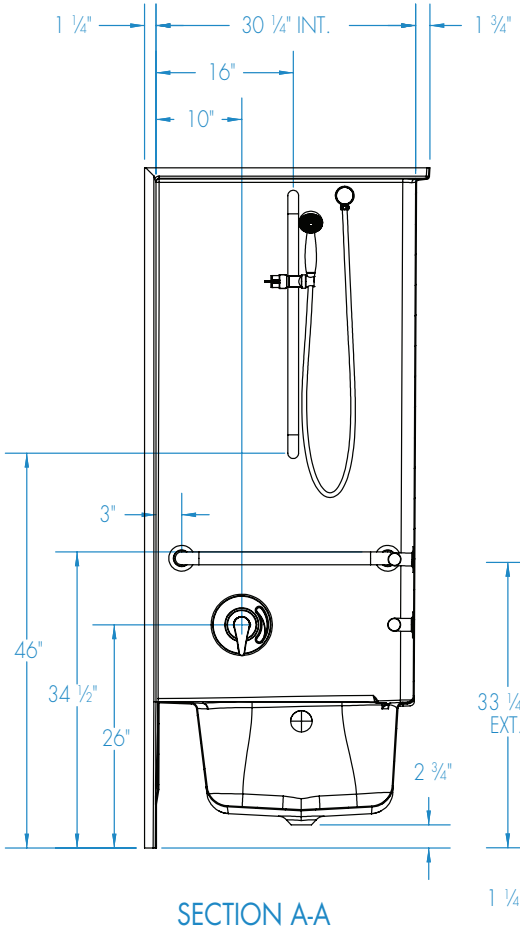

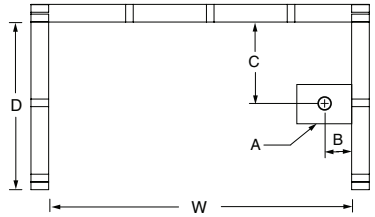

FRAMING DIMENSIONS inches (mm)

Type	D Depth	W Width	A	B	C
Alcove	33 ¼ (845)	60 ⅛ (1525)	6 x 12 (150 x 305)	1 ½ (40)	15 (380)

Installation Options:
1. Install in a recessed pit for rough-in floor installation.
2. Build sub-floor to level finished floor with top of shower threshold.

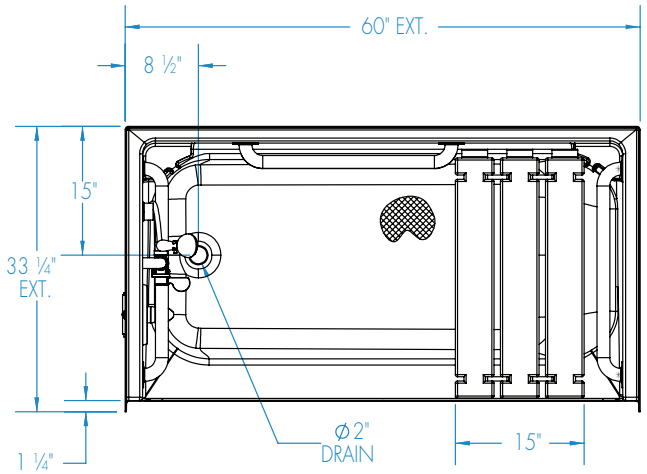

Shell tolerance: +0, – ⅜" All other tolerances: ±1"

FAX TO THE AQUATIC CENTRALIZED CUSTOMER SERVICE CENTER (866) 544-5353

Rev. 01.27.16